Enkel Flaggermuskasse

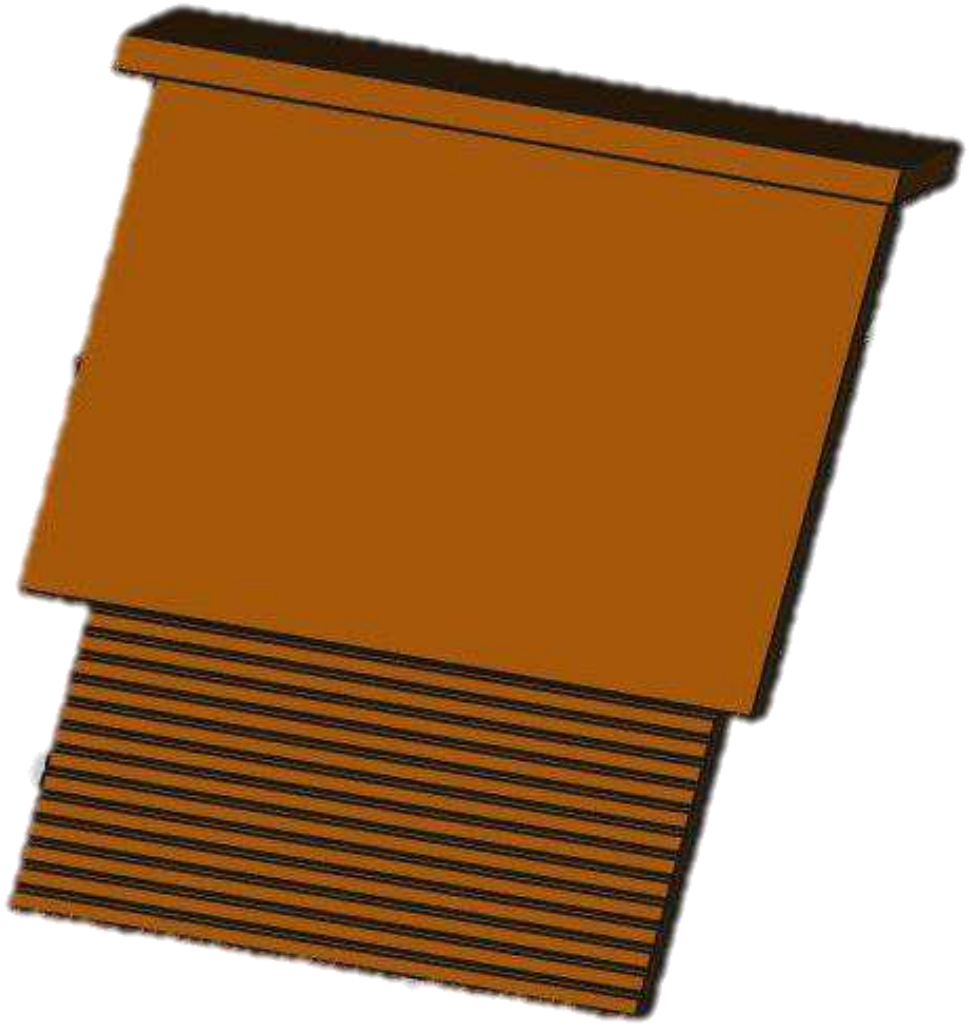

Dato: 02/04/2016

HusHageHobby.no

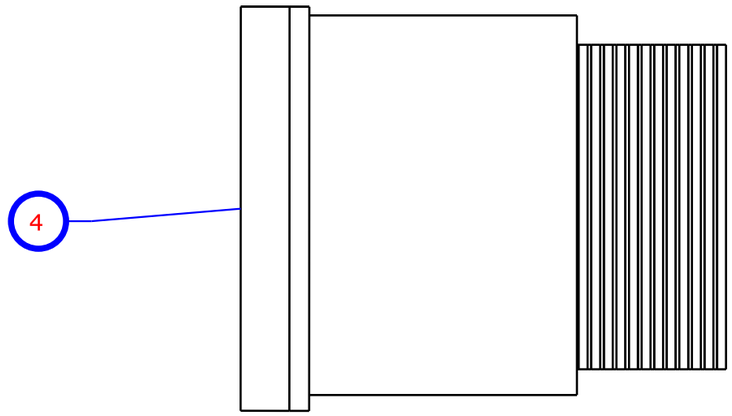

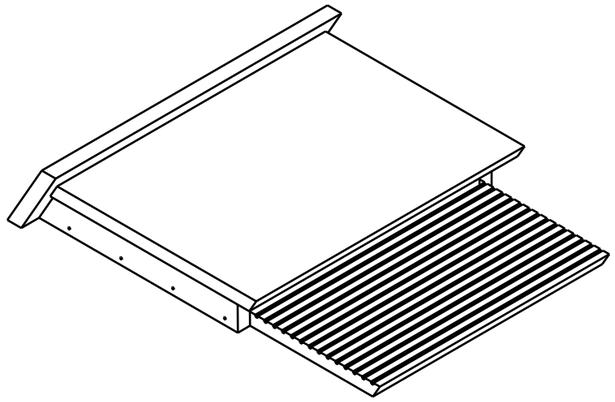

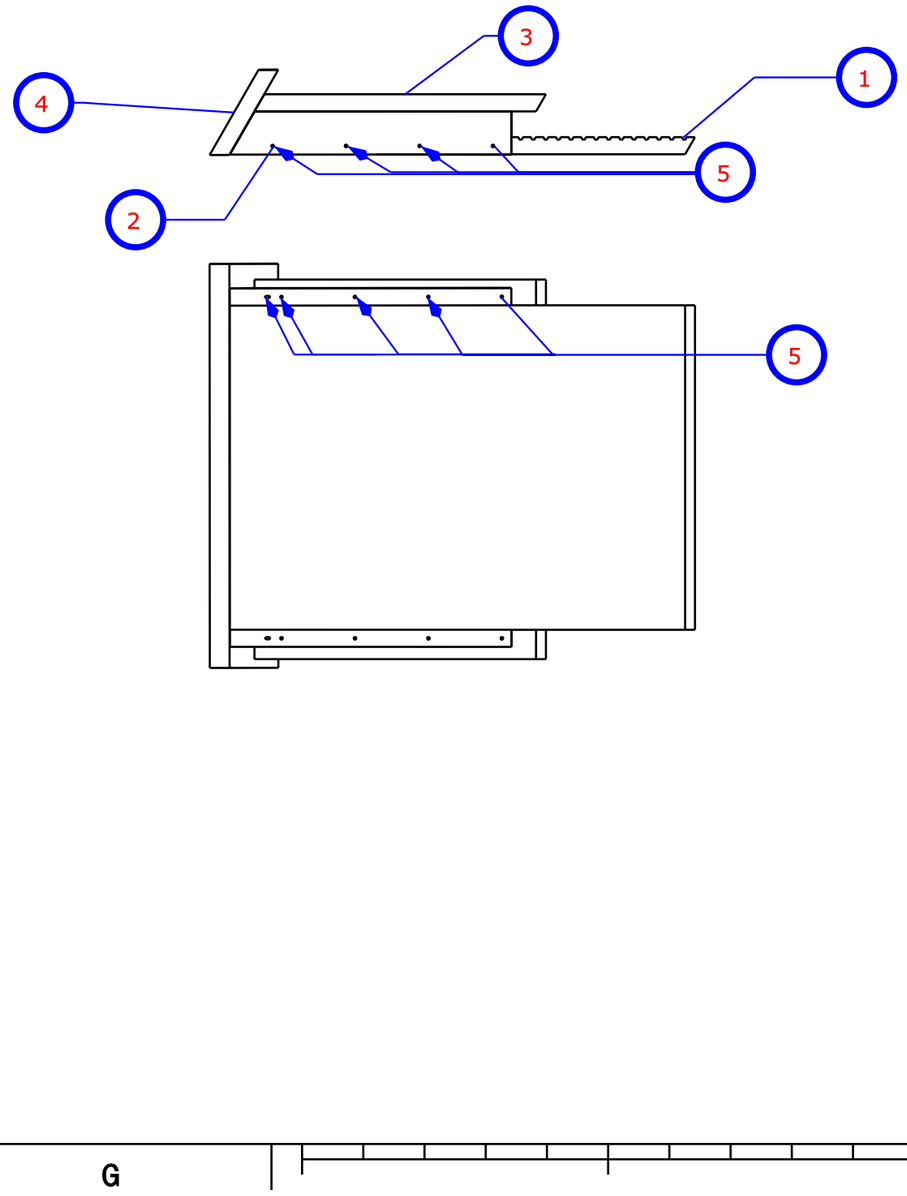

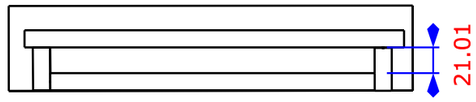

** Not showed on drawing*

#	Number	Description	Qty
12			
11			
10			
9			
8			
7			
6		Vannfast lim / Waterproof Glue	1*
5	F16021901	Skrue 3x30 Torqs	20
4	F16040204	Tak - Enkel Flaggermuskasse	1
3	F16040203	Fremside - Enkel Flaggermuskasse	1
2	F16040202	Sidevegg - Enkel Flaggermuskasse	2
1	F16040201	Bakvegg - Enkel Flaggermuskasse	1

DESIGNED BY: Tom Erik Forshaug
DATE: 02/04/2016

Enkel Flaggermuskasse

HusHageHobby.no

SIZE A3

SCALE 1:5

WEIGHT (kg)

DRAWING NUMBER F16040205

SHEET 1/1

I	-
H	-
G	-
F	-
E	-
D	-
C	-
B	-
A	02/04/2016

This drawing is our property; it can't be reproduced or communicated without our written agreement.

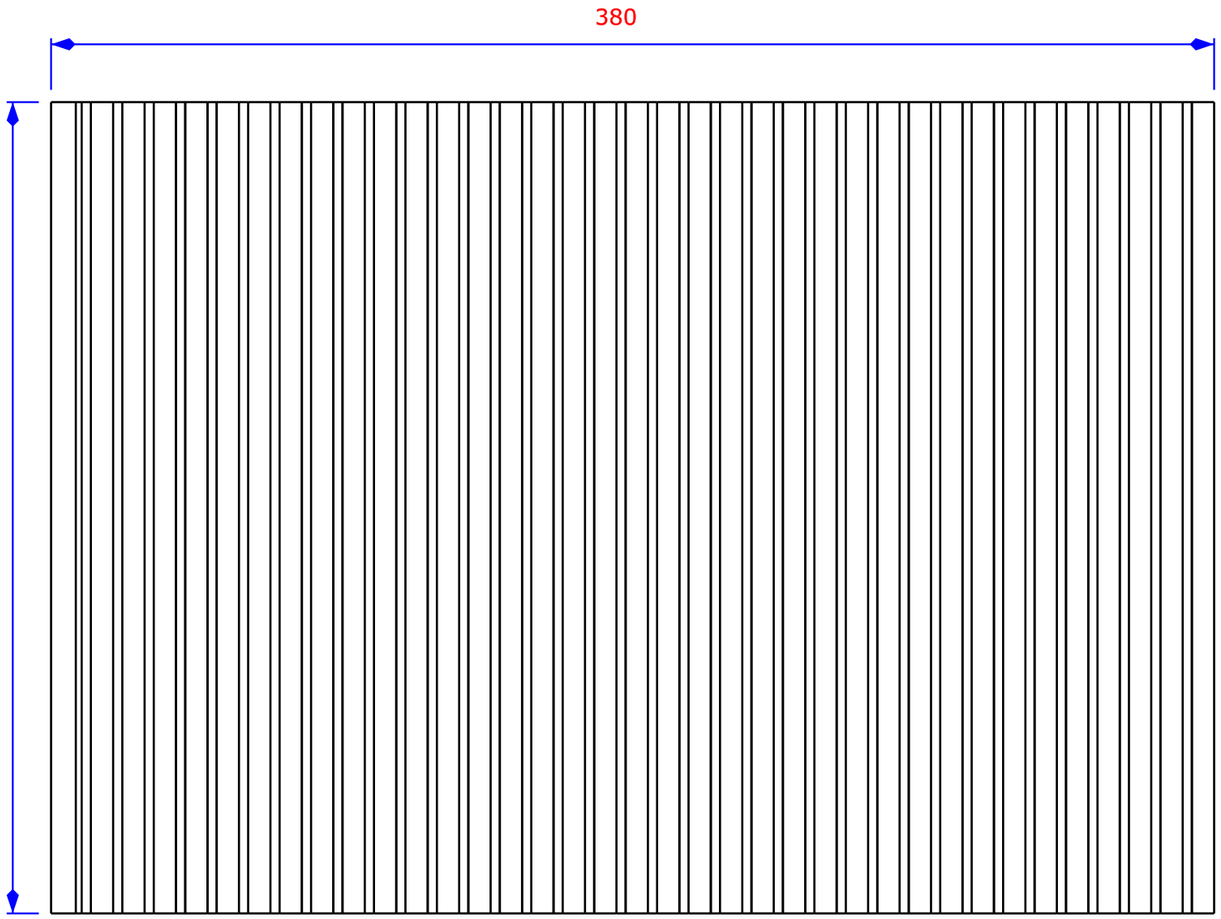

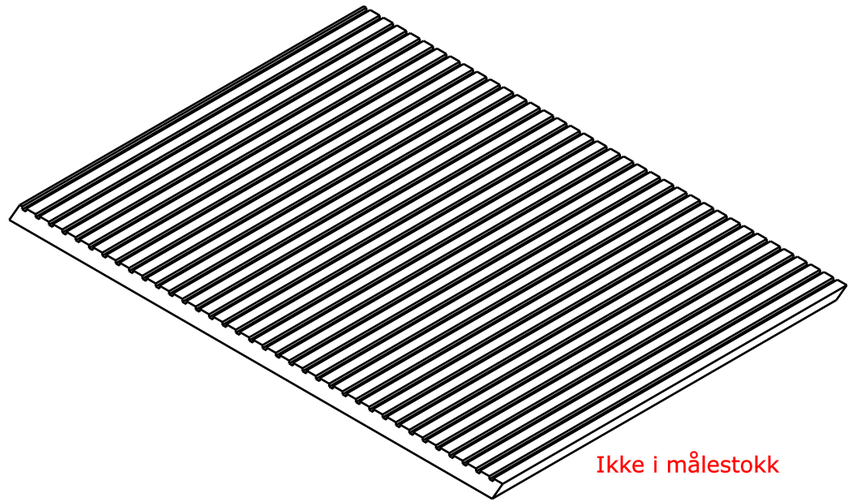



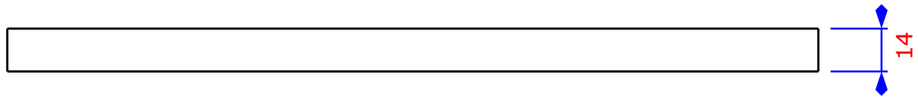

DESIGNED BY: Tom Erik Forshaug	Bakvegg
DATE: 02/04/2016	Enkel Flaggermuskasse
SIZE A3	HusHageHobby.no
SCALE 1:2	WEIGHT (kg)
DRAWING NUMBER F16040201	SHEET 1/1

This drawing is our property; it can't be reproduced or communicated without our written agreement.

I	-
H	-
G	-
F	-
E	-
D	-
C	-
B	-
A	02/04/2016

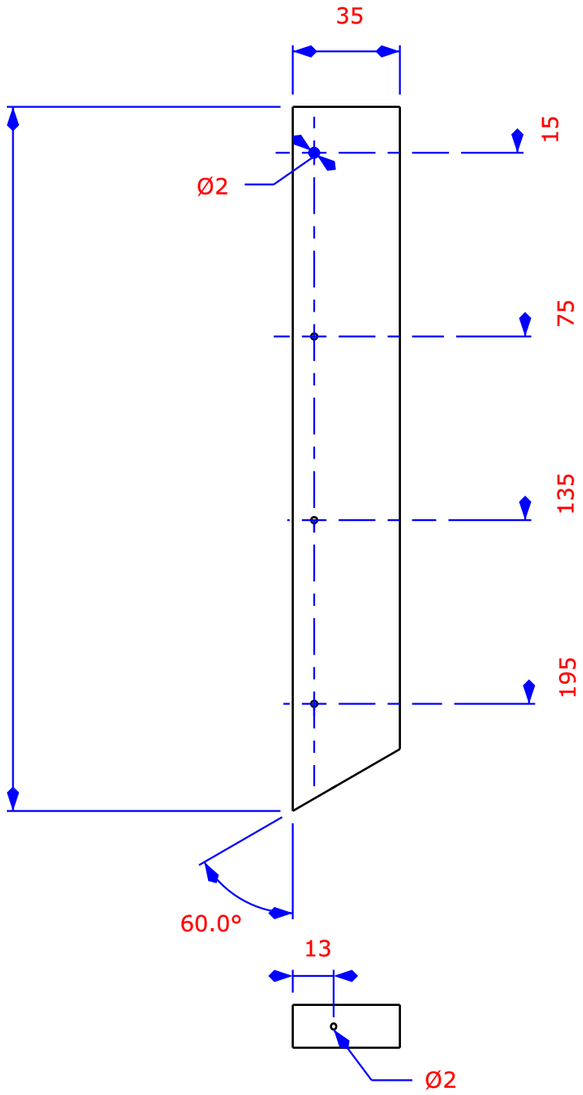

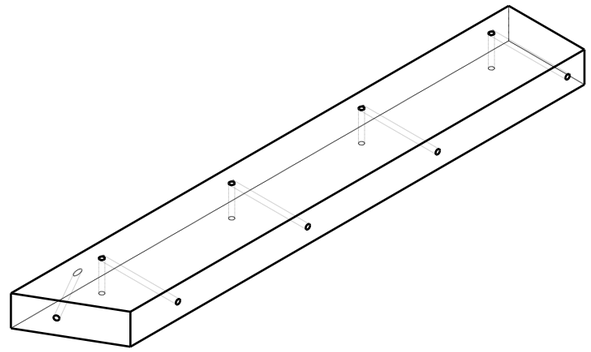

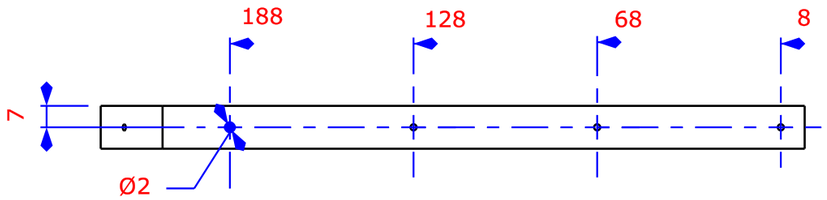

DESIGNED BY: Tom Erik Forshaug	
DATE: 02/04/2016	
SIZE A3	
SCALE 1:2	WEIGHT (kg)
DRAWING NUMBER F16040202	SHEET 1/1

Sidevegg

Enkel Flaggermuskasse

HusHageHobby.no

I	-
H	-
G	-
F	-
E	-
D	-
C	-
B	-
A	02/04/2016

This drawing is our property; it can't be reproduced or communicated without our written agreement.

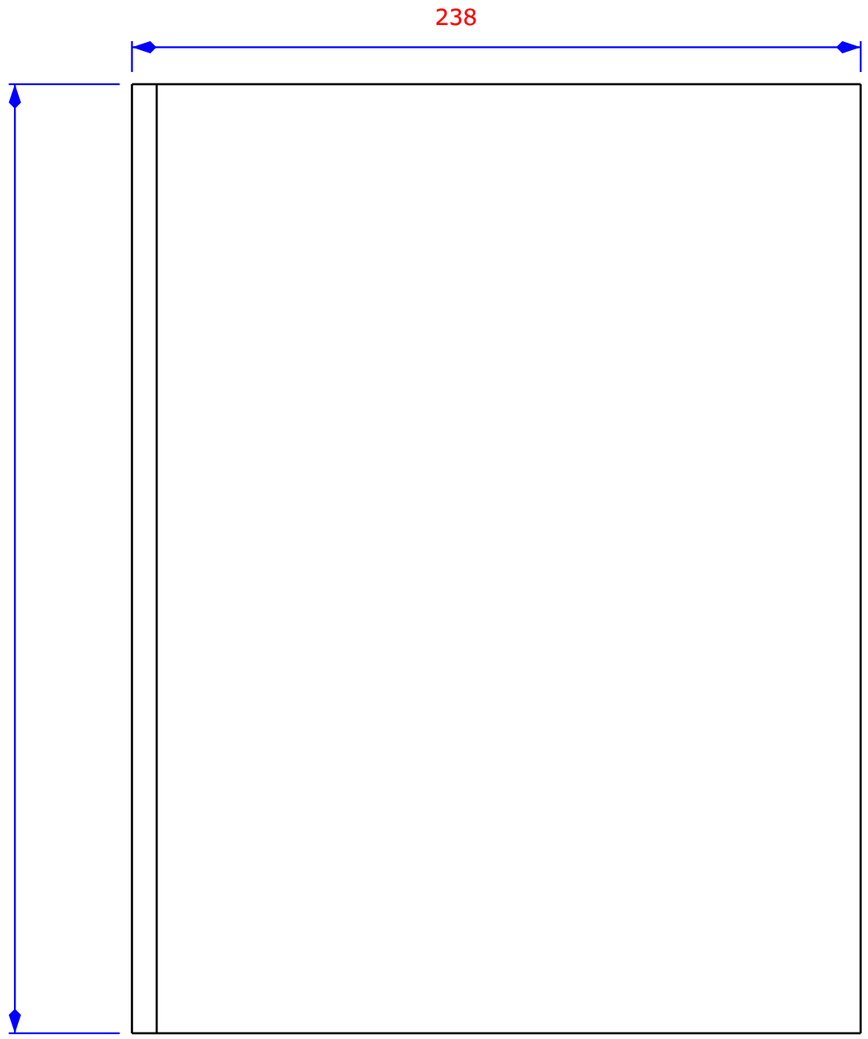

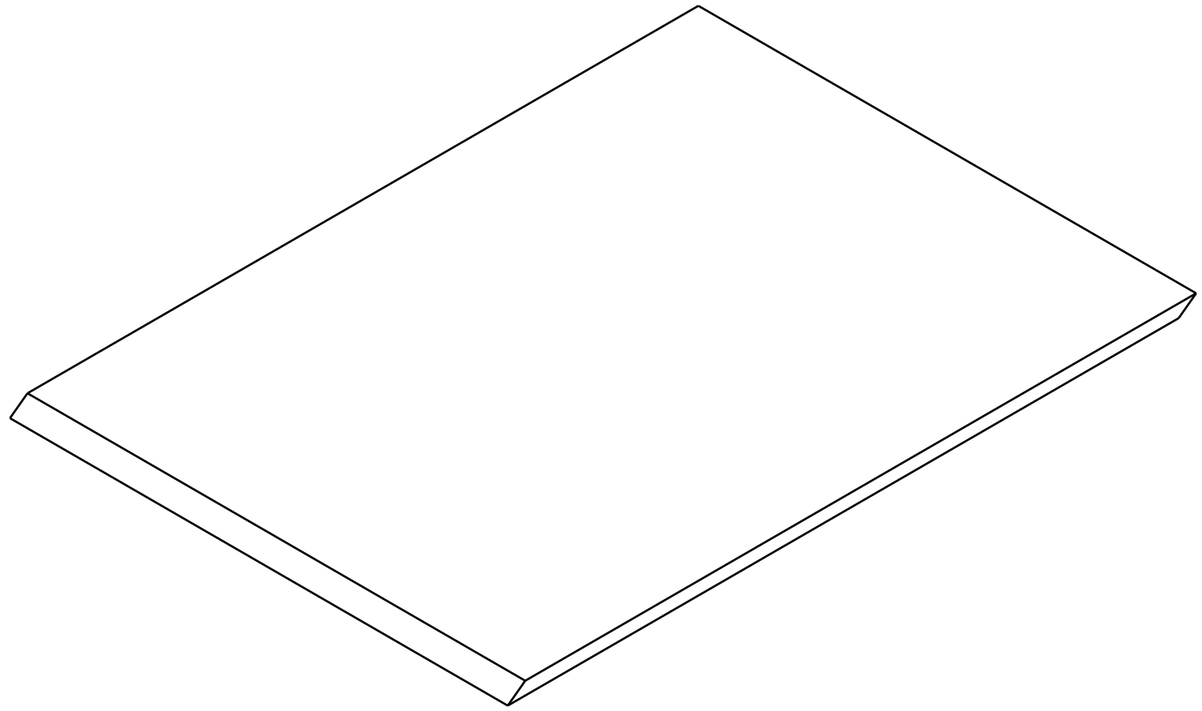

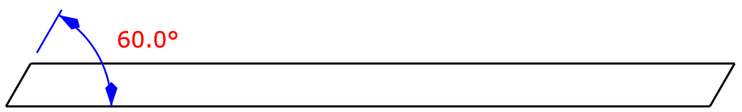

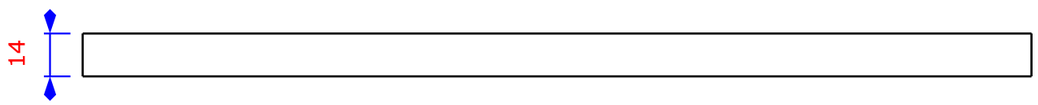

DESIGNED BY: Tom Erik Forshaug	Fremside
DATE: 02/04/2016	Enkel Flaggermuskasse
SIZE A3	HusHageHobby.no
SCALE 1:2	WEIGHT (kg)
DRAWING NUMBER F16040203	SHEET 1/1

This drawing is our property; it can't be reproduced or communicated without our written agreement.

I	-
H	-
G	-
F	-
E	-
D	-
C	-
B	-
A	02/04/2016

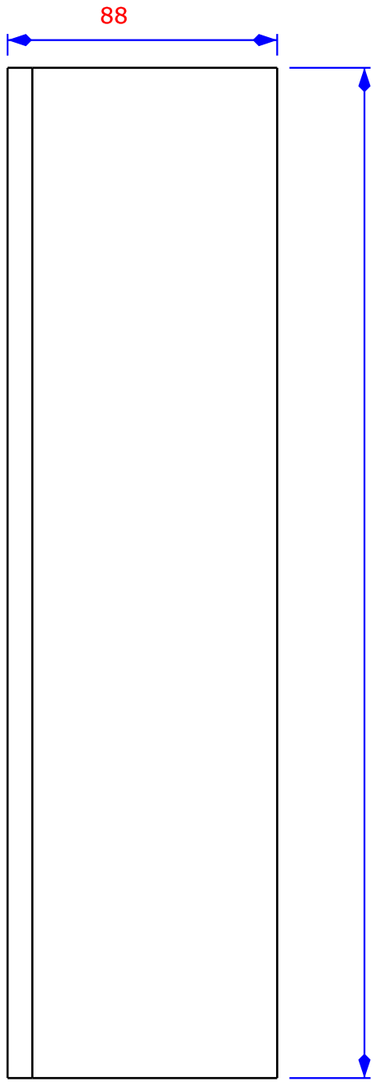

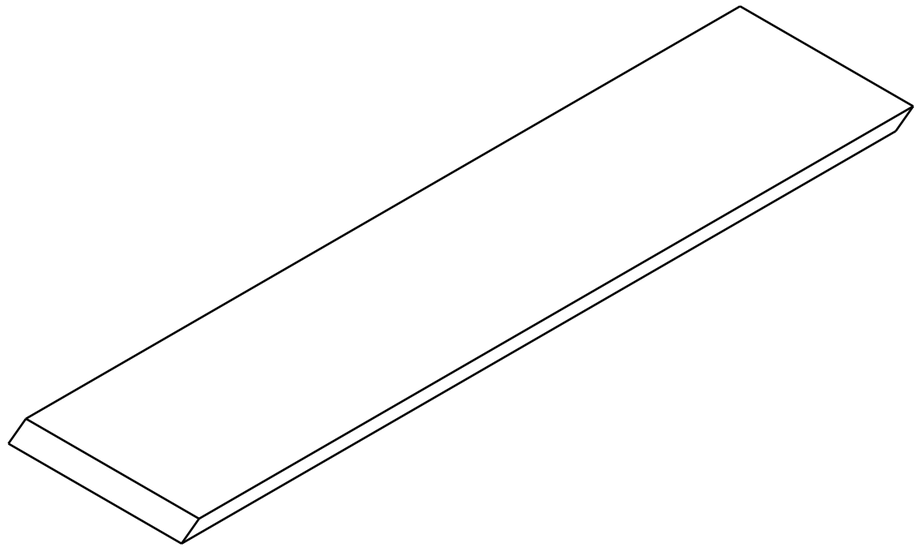

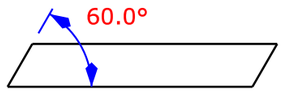

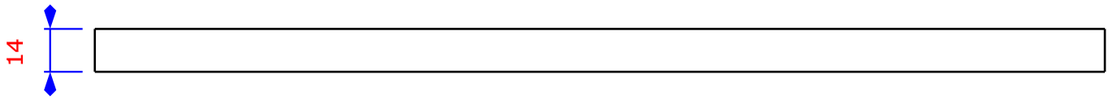

DESIGNED BY: Tom Erik Forshaug	Tak
DATE: 02/04/2016	Enkel Flaggermuskasse
SIZE A3	HusHageHobby.no
SCALE 1:2	WEIGHT (kg)
DRAWING NUMBER F16040204	SHEET 1/1

This drawing is our property; it can't be reproduced or communicated without our written agreement.

I	-
H	-
G	-
F	-
E	-
D	-
C	-
B	-
A	02/04/2016